ACTUATECH
ACTUATOR TECHNOLOGY

Actuator datasheet

GS180F07F10

Modification reserved. Rev.date 05.2021.
No guarantee for accuracy.
Older data sheets are invalid

COMPANY WITH MANAGEMENT SYSTEM CERTIFIED BY DNV GL
= ISO 9001 =
= ISO 14001 =

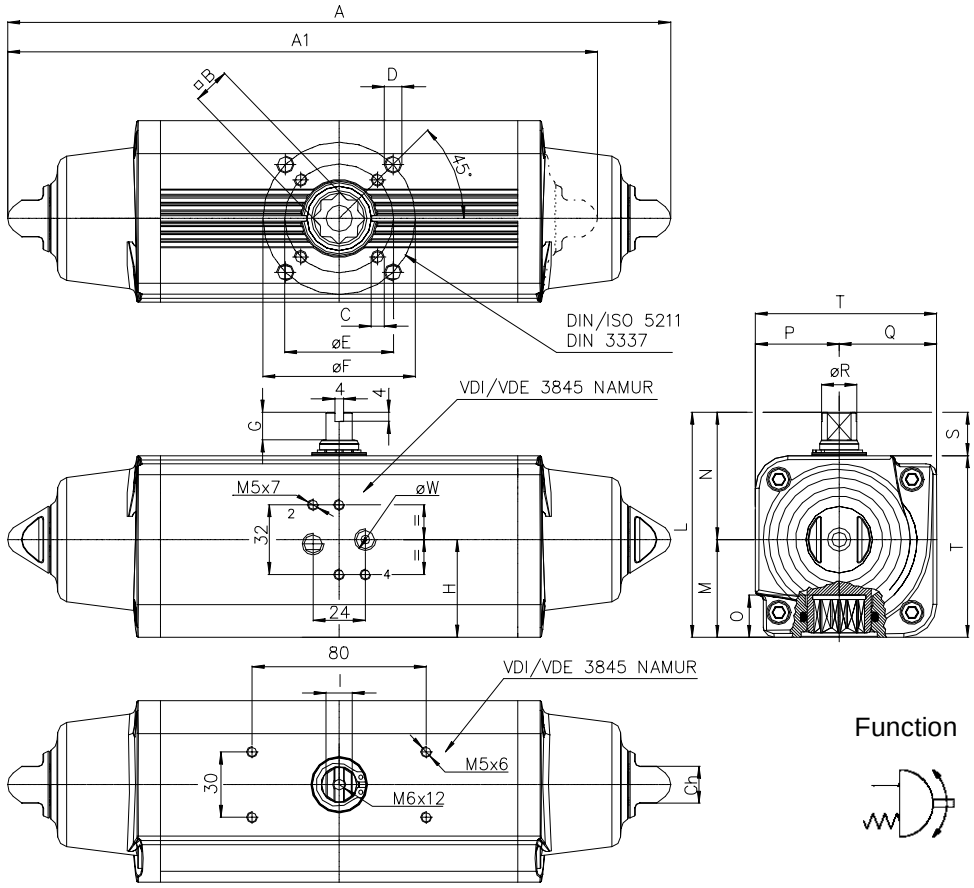

Function

Ref.	Dimensions (mm)
Flange	F07 - F10
C x depth	M8x12
D x depth	M10x15
E	70
F	102
B	22
O	24.3
A	474
G	19
H (bore)	62
I	19
L	148
M	62
N	86
P	56
Q	62
R	25.5
S	30
T	118
W	1/8" GAS
Ch	22
Ancillaries Attachment	AA2

Spring return Actuators Normally Closed (N.C.)- Output Torque related to rotation angle , in Nm
(0°valve closed 90° valve open)

Spring Torque				Air pressure supply in bar																												
				2,4			2,8			3			3,5			4,2			5			5,6			6			7			8		
SIZE	0°	50°	90°	0°	50°	90°	0°	50°	90°	0°	50°	90°	0°	50°	90°	0°	50°	90°	0°	50°	90°	0°	50°	90°	0°	50°	90°	0°	50°	90°	0°	50°	90°
2,8	60,0	45,0	90,0	68,6	32,1	38,6	90,0	45,0	60,0	100,7	51,4	70,7	127,5	67,5	97,5	165,0	90,0	135,0															
3,5	75,0	56,3	112,5							85,7	40,2	48,2	112,5	56,3	75,0	150,0	78,8	112,5	192,9	104,5	155,4	225,0	123,8	187,5									
4,2	90,0	67,5	135,0										97,5	45,0	52,5	135,0	67,5	90,0	177,9	93,2	132,9	210,0	112,5	165,0	231,4	125,4	186,4	285,0	157,5	240,0	338,6	189,6	293,6
5,6	120,0	90,0	180,0																147,9	70,7	87,9	180,0	90,0	120,0	201,4	102,9	141,4	255,0	135,0	195,0	308,6	167,1	248,6

Technical Data

Max Pressure	** Min Pressure	Rotation	Stroke Adjustment	Screw Stroke Adjustment	*Moving time (sec.)		Operating temperature (°C)
					Opening	Closing	
8.4 bar	2.4 bar	92° -1° +91°	10 °	For 1° drive Need 2/3 turn screw	1.29	1.41	Standard –20°C +80°C High temperature –20°C +150°C Low temperature –50°C +60°C

Weight Kg	Chamber Ø (mm)	Air volume L/cycle	Maximum flange torque values
8.9	90	1.01	F07 = 250 Nm F10 = 500 Nm

	A1	Weight Kg
Spring return Actuator with spring force 2.8 , is manufactured with only one spring cap and normal end cap (available only in standard version).	406.6	7.4

*The moving time could vary on different operating and installation factors.
**Attention: for “High Temperature” and “Low Temperature” version, the Min Pressure is 3.5 bar.

Operating Medium
The operating medium shall have a dew point equal to– 20 °C or, to be at least, 10 °C below the ambient temperature (ISO 85731, Class 3).
The maximum particle size shall not exceed 40 µm (ISO 8573-1, Class 5).

ACTUATECH S.p.A.
Via San Lorenzo, 70 - 25069 Villa Carcina (BS) – ITALY Tel. (+39) 0308908142 Fax (+39) 0308908143
http://www.actuatech.com e-mail: actuatech@actuatech.com